NIK Desk Installation Instructions

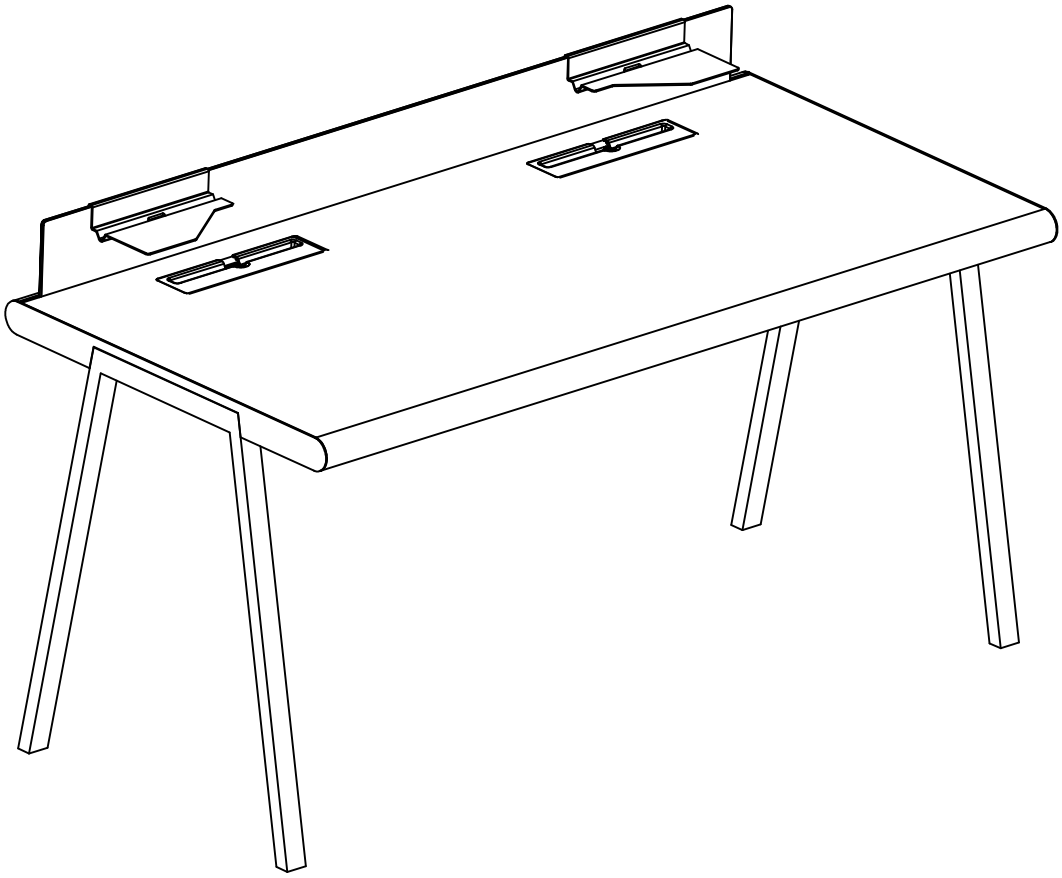

Model: NIK48BLBL-1
NIK48BLWA-1 / NIK48BWMA-1
NIK48BWW-1 / NIK48BWWA-1

● Please read these instructions carefully before installation.

Installation Instructions

Thanks for choosing the Nik Desk, please read these instructions carefully before assembling this item. Our customer service can quickly assist you with installation questions and missing or defective parts. We will not be liable for damage or injury caused by incorrect mounting, assembly, or use.

● Parts List :

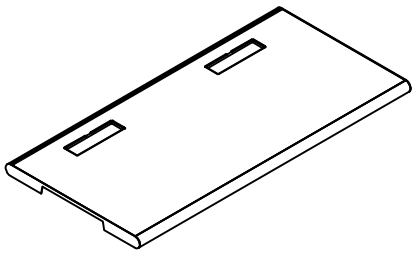

A.desk top
1PC

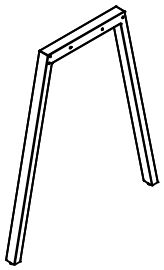

B.leg (left)
1PC

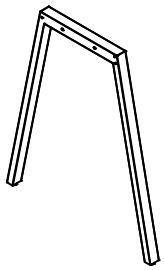

C.leg (right)
1PC

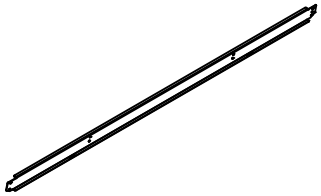

D.connecting bar
1PC

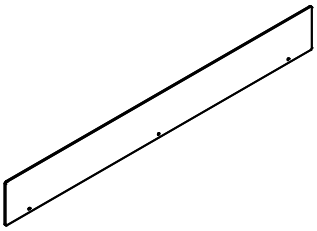

E.glass
1PC

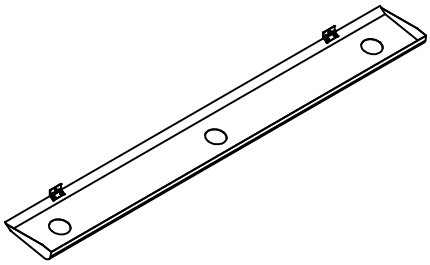

F.cable tray
1PC

G.cable channel
1PC

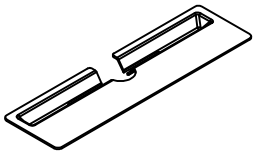

H.desk top tray
2PCS

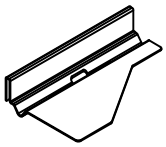

I. glass tray(left)
1PC

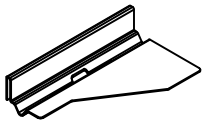

J.glass tray(right)
1PC

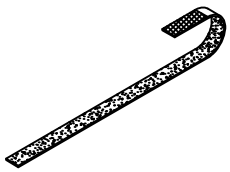

K.Velcro ties
2PCS

● Assembly Hardware：

a-M6 thumb bolts 3pcs	b-M6*12 hex socket bolts 11pcs	c-M4*8 Philips head bolts 2pcs	d-5mm Allen Key 1pc	e-4mm Allen Key 1pc

Installation Instructions:

Step 1: Read all instructions before assembly.

Step 2: Attach the connecting bar (D) to left leg (B) and right leg (C). (Figure 1)

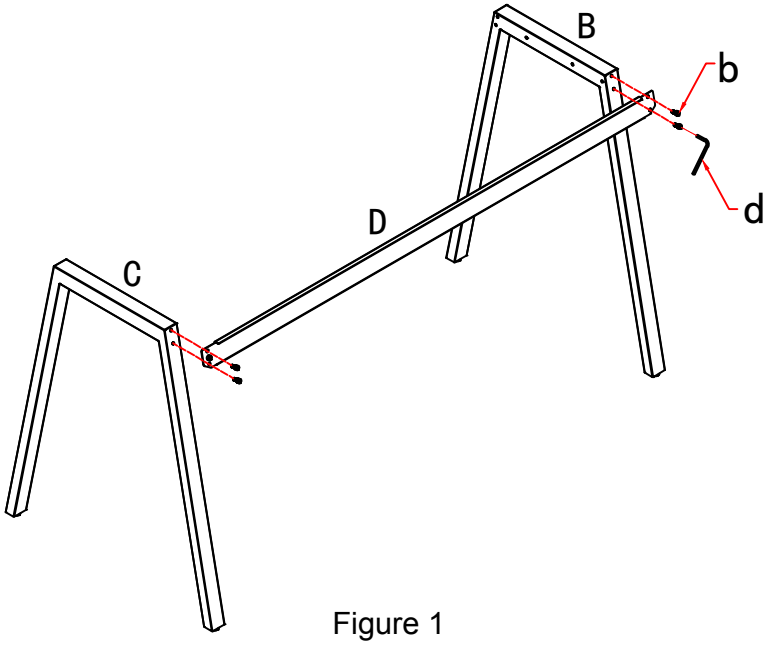

Figure 1

Step 3: Attach the desk top (A) to left leg (B) and right leg (C). (Figure 2)

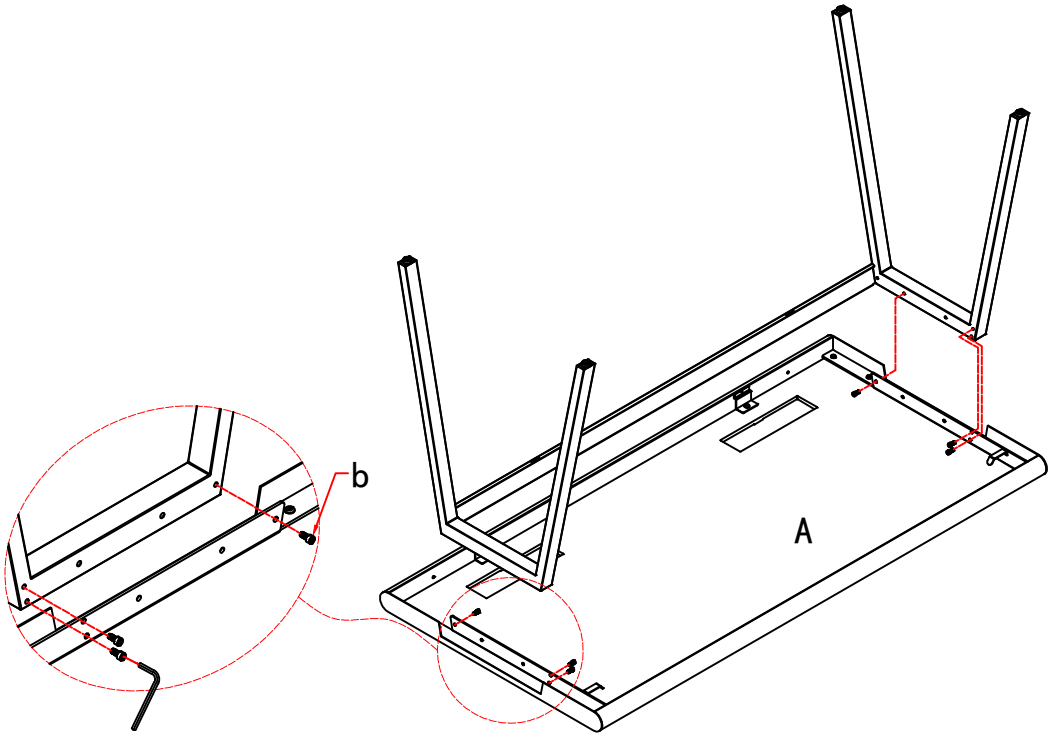

Figure 2

Step 4: Attach the cable tray (F) under desk top with bolts (c). (Figure 3)

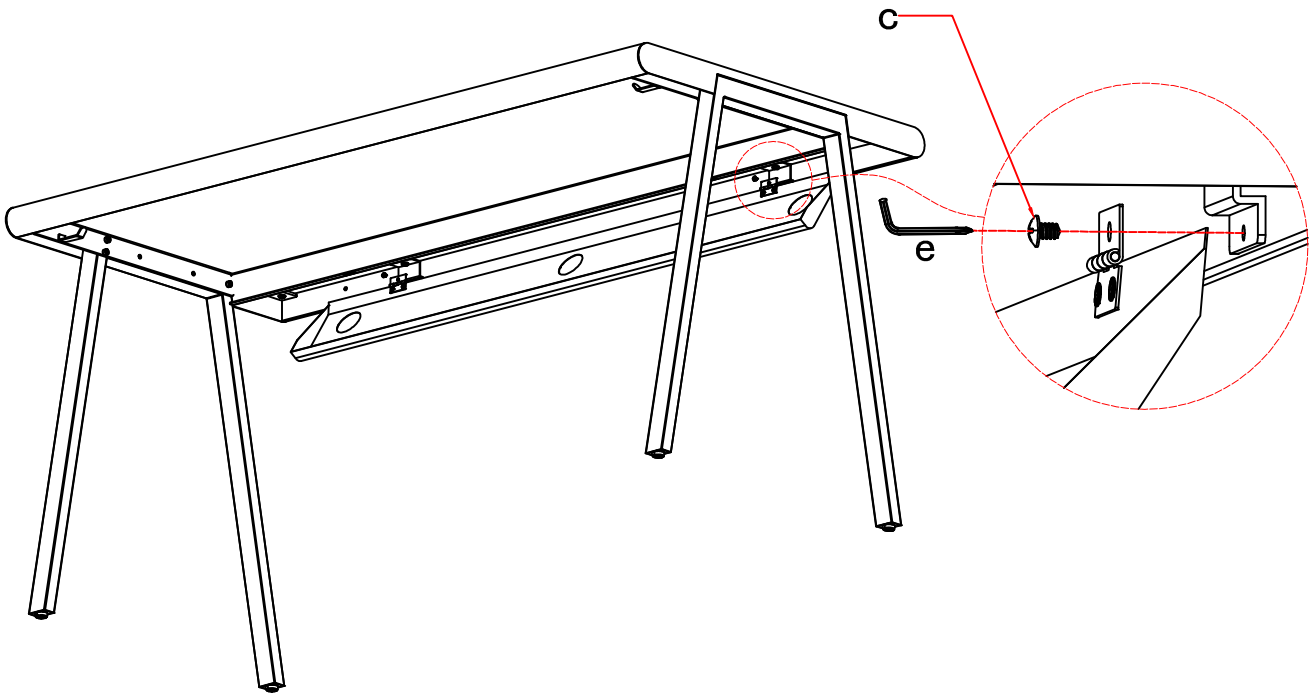

Figure 3

Step 5: Attach each side of the cable tray on the connecting bar (D) with Velcro ties (K). (Figure4)

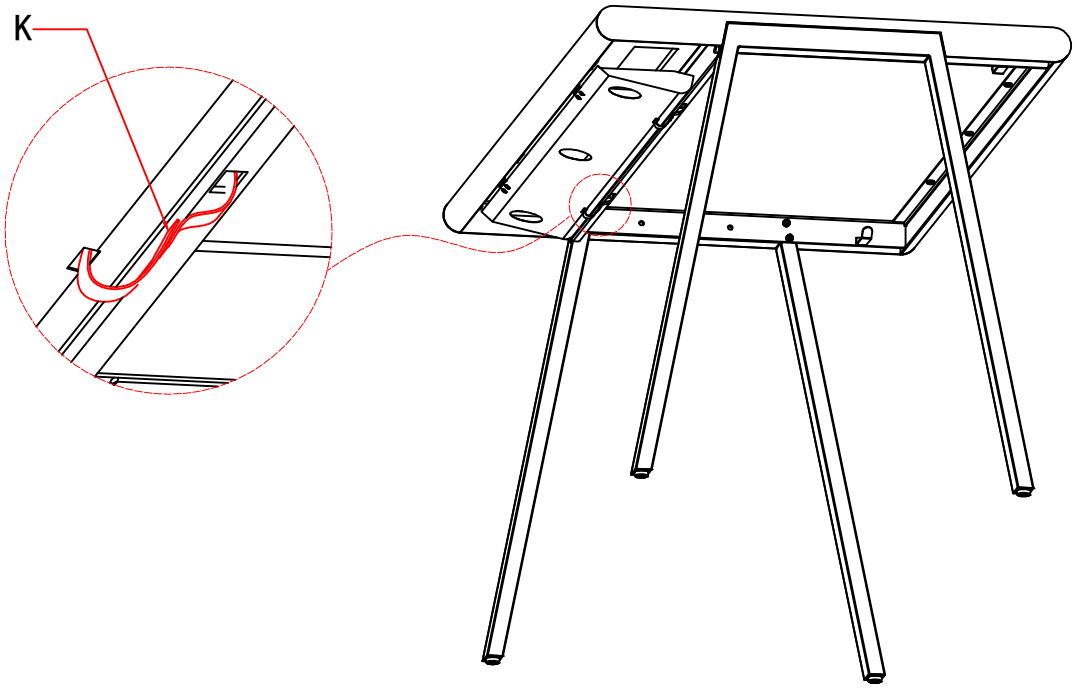

Figure 4

Step 6: Insert the glass (E) into desk top and lightly tighten with M6 thumb bolts (a). Do not over tighten. (Figure 5)

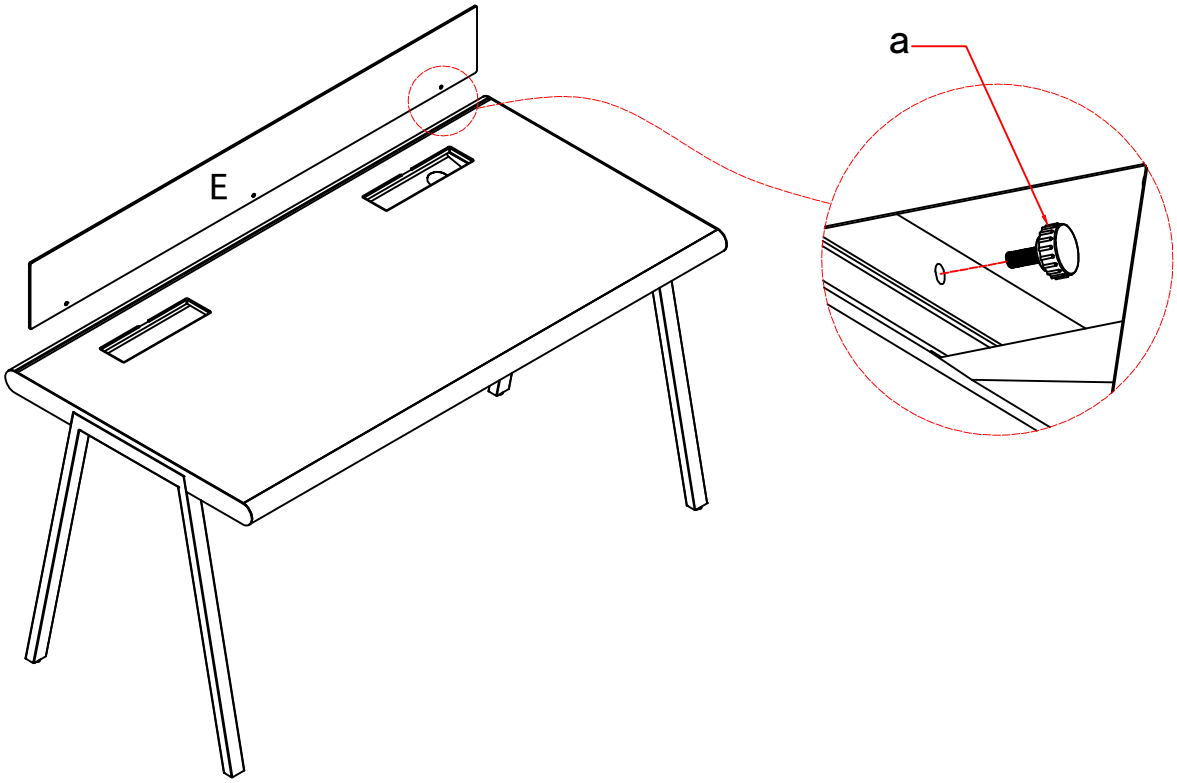

Figure 5

Step 7: Attach the cable channel (G) on the back side of left or right leg (hook to the bottom of leg) and fasten using bolt (b). (Figure 6)

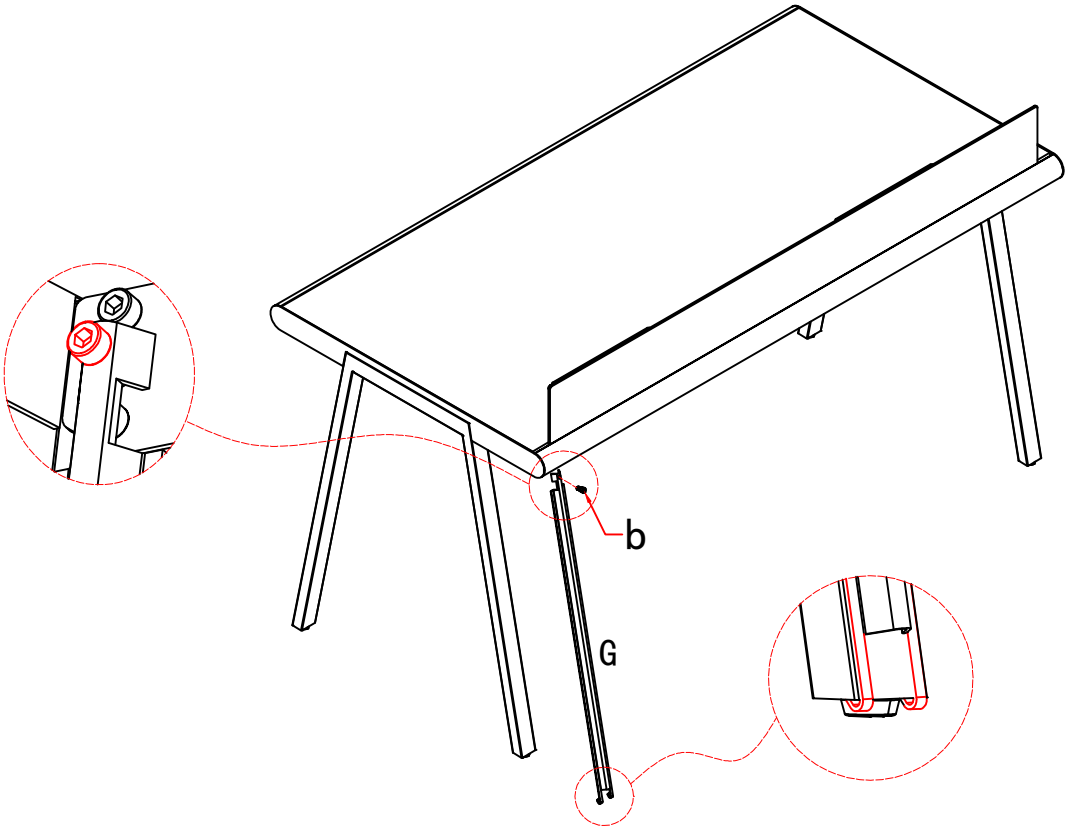

Figure 6

Step 8: Place the glass trays (I & J) and desk top trays (H) in place. (Figure 7)

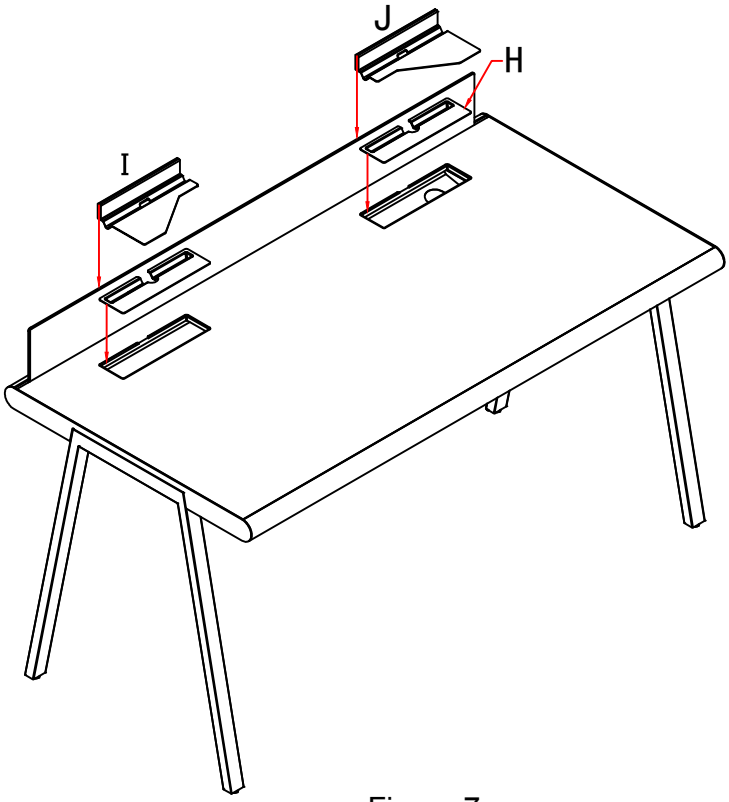

Figure 7

Step 9: Complete. (Figure 8)
Top capacity: 132 lbs

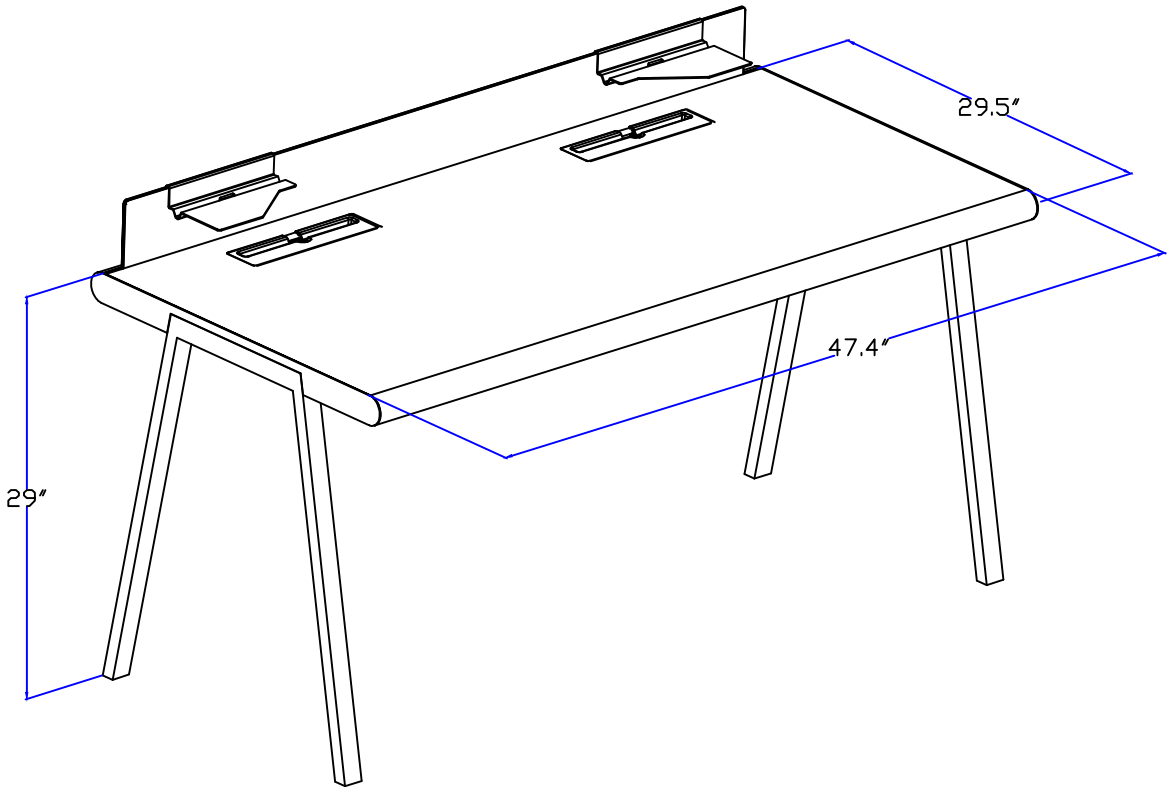

Figure 8