Degenkolb

DEGENKOLB ENGINEERS
300 South Grand Ave. #1115,
Los Angeles, CA 90071
(213) 596-5000 (phone)
(213) 596-5960 (fax)
www.degenkolb.com

Office Of Statewide Health Planning And Development
ANCHORAGE PRE-APPROVAL

OPA - 2626 - 10

PRODUCT MANUFACTURER: **PETER PEPPER PRODUCTS**
PRODUCT NAME/TYPE/MODEL: **EVOLUTION MODULAR WALL SYSTEM [EF Series]**

GENERAL NOTES:

1. FORCES ARE DETERMINED PER 2010 CALIFORNIA BUILDING CODE SECTION 1613A AND ASCE 7-05 SECTIONS 11, 12 AND 13 USING THE FOLLOWING EQUATION (EQ. 13.3-2):

   $F_p = 0.4\ a_p\ S_{DS}\ W_p\ (1+2\ [z/h]) / (R_p / I_p) = 0.4 * 1.0 * 1.927 * W_p * (3) / (2.5/1.5) = 1.39\ W_p$
   $F_v = 0.2\ S_{DS}\ W_p = 0.39\ W_p$ WHERE,

   $S_{DS} = 1.927$
   I_p 1.50
   a_p 1.00
   R_p 2.50
   W_p MAXIMUM OPERATING WEIGHT

   NOTE THAT THE FORCE LEVEL IS FOR STRENGTH DESIGN

2. THIS PRE-APPROVAL CONFORMS TO THE 2010 CALIFORNIA BUILDING CODE.

3. THE DETAILS IN THIS PRE-APPROVAL MAY BE USED AT ANY LOCATION IN THE STATE OF CALIFORNIA WHERE S_{DS} IS NOT GREATER THAN 1.927.

4. THE DETAILS MAY BE USED FOR ANY LEVEL OF THE BUILDING WHERE THE ABOVE STATED PRODUCT IS LOCATED.

APPROVED
Fixed Equipment Anchorage
Office of Statewide Health Planning and Development

OPA-2626-10
Pre-approval Program Manager
Anthony R. Pike
(916) 440-8470

Reviewed By: ROGER LI 12/13/11
Date

REGISTERED PROFESSIONAL ENGINEER
ANUJ BANSAL
No. 4583
Exp. 12-31-11
STRUCTURAL
STATE OF CALIFORNIA

Degenkolb

DEGENKOLB ENGINEERS
300 South Grand Ave. #1115,
Los Angeles, CA 90071
(213) 596-5000 (phone)
(213) 596-5960 (fax)
www.degenkolb.com

Office Of Statewide Health Planning And Development
ANCHORAGE PRE-APPROVAL

OPA - 2626 - 10

PRODUCT MANUFACTURER: **PETER PEPPER PRODUCTS**
PRODUCT NAME/TYPE/MODEL: **EVOLUTION MODULAR WALL SYSTEM [EF Series]**

GENERAL NOTES (CONT'D):

5. ALL LOADS SHOWN ON THE CALCULATIONS ARE BASED ON STRENGTH DESIGN.
6. THIS PRE-APPROVAL COVERS ONLY THE ANCHORAGE OF THE UNIT TO THE BUILDING'S STRUCTURE.
7. TYPICAL DIMENSIONAL TOLERANCE IS ± ¼".

RESPONSIBILITIES OF THE STRUCTURAL ENGINEER OF RECORD:

1. VERIFY THAT ANCHORS MEET ICC-ESR MINIMUM SPACING AND EDGE DISTANCE SPECIFICATIONS FROM ANY NEW OR EXISTING ANCHORS AND WALL OPENINGS. IF SPACING IS INADEQUATE, SEOR NEEDS TO REVISE FASTENER CAPACITY ACCORDINGLY, AND SUBMIT TO OSHPD FOR REVIEW AND APPROVAL.
2. VERIFY THE INSTALLATION IS IN CONFORMANCE WITH THE 2010 CBC AND WITH THE DETAILS SHOWN IN THIS PRE-APPROVAL. VERIFY THAT THE EQUIPMENT'S ACTUAL WEIGHT, CG LOCATION, ANCHOR LOCATIONS, ANCHOR DETAILS AND THE MATERIAL AND GAGE OF THE UNIT WHERE ATTACHMENTS ARE MADE AGREE WITH THE INFORMATION SHOWN IN THIS PRE-APPROVAL.
3. VERIFY THAT THE CONCRETE WALL / CMU WALL WHICH THE UNIT IS ANCHORED MEETS THE REQUIREMENTS OF THE APPLICABLE ICC-ESR.
4. DESIGN ANY SUPPLEMENTARY MEMBERS AND THEIR ATTACHMENTS WHICH THE UNIT IS ANCHORED TO. VERIFY THE ADEQUACY OF ANY EXISTING MEMBERS AND THEIR ATTACHMENTS WHICH THE UNIT IS ANCHORED TO, FOR THE FORCES EXERTED ON THEM BY THE UNIT IN ADDITION TO ALL OTHER LOADS AND FORCES.

APPROVED
Fixed Equipment Anchorage
Office of Statewide Health Planning and Development

OPA-2626-10
Pre-approval Program Manager
Anthony R. Pike
(916) 440-8470

Roger Li 12/13/11
Reviewed By: ROGER LI Date

REGISTERED PROFESSIONAL ENGINEER
ANUJ BANSAL
No. 4583
Exp. 12-31-11
STRUCTURAL
STATE OF CALIFORNIA

Degenkolb

DEGENKOLB ENGINEERS
300 South Grand Ave. #1115,
Los Angeles, CA 90071
(213) 596-5000 (phone)
(213) 596-5960 (fax)
www.degenkolb.com

Office Of Statewide Health Planning And Development
ANCHORAGE PRE-APPROVAL

OPA - 2626 - 10

PRODUCT MANUFACTURER: **PETER PEPPER PRODUCTS**
PRODUCT NAME/TYPE/MODEL: **EVOLUTION MODULAR WALL SYSTEM [EF Series]**

MATERIAL SPECIFIC NOTES FOR SUPPORTING STRUCTURAL MEMBERS:

1. LIGHT GAGE METAL:
   MINIMUM GAGE: 18 GA.
   MINIMUM YIELD STRENGTH (fy) = 33 KSI

2. WOOD:
   MINIMUM GRADE: DOUGLAS FIR NO.3 OR BETTER
   MINIMUM SPECIFIC GRAVITY (G) = 0.46

3. CONCRETE:
   MINIMUM UNIT WEIGHT = 110 pcf (LIGHT WEIGHT CONCRETE)
   MINIMUM UNIT WEIGHT = 145 pcf (NORMAL WEIGHT CONCRETE)
   MINIMUM COMPRESSIVE STRENGTH (f'c) = 2500 PSI
   MINIMUM CONCRETE WALL THICKNESS = 5"

4. MASONRY:
   MINIMUM COMPRESSIVE STRENGTH (f'm) = 1500 PSI
   MINIMUM MASONRY WALL THICKNESS = $3\frac{3}{4}$"

5. SEE 2010 CALIFORNIA BUILDING CODE FOR MORE INFORMATION AND OTHER REQUIREMENTS.

6. IF THE WOOD MATERIAL USED HAS A LOWER QUALITY THAN WHAT IS SPECIFIED ABOVE, SEOR SHALL EVALUATE THE BACKING SUPPORT DESIGN, AND SUBMIT TO OSHPD FOR REVIEW AND APPROVAL.

APPROVED
Fixed Equipment Anchorage
Office of Statewide Health Planning and Development

OPA-2626-10
Pre-approval Program Manager
Anthony R. Pike
(916) 440-8470

Reviewed By ROGER LI 12/13/11 Date

REGISTERED PROFESSIONAL ENGINEER
ANUJ BANSAL
No. 4583
Exp. 12-31-11
STRUCTURAL
STATE OF CALIFORNIA

MODEL DIMENSIONS

Name	W (in)	H (in)	D (in)	Wt (lbs)
EF3618	18	36	3	30
EF5418	18	54	3	45
EF5436	36	54	3	69
EF1836	36	18	3	30
EF1854	54	18	3	54
EF3636	36	36	3	59
EF3654	54	36	3	69
EF3672	72	36	3	82
EF3690	90	36	3	103

APPROVED
Fixed Equipment Anchorage
Office of Statewide Health Planning and Development

OPA-2626-10
Pre-approval Program Manager
Anthony R. Pike
(916) 440-8470

Reviewed By: ROGER LI 12/13/11
Date

REGISTERED PROFESSIONAL ENGINEER
ANUJ BANSAL
No. 4583
Exp. 12-31-11
STRUCTURAL
STATE OF CALIFORNIA

Degenkolb
Degenkolb Engineers
300 S. Grand Ave. #1115, Los Angeles, CA 90071
Phone: (213) 596-5000 - Fax: (213) 596-5960

PETER PEPPER PRODUCTS	Designed By	TY
	Project #	B0621026.00
EVOLUTION MODULAR WALL SYSTEM EF SERIES	Date	11/08/2011

METAL/WOOD STUDWALL ATTACHMENT (MODELS EF3618, EF5418)

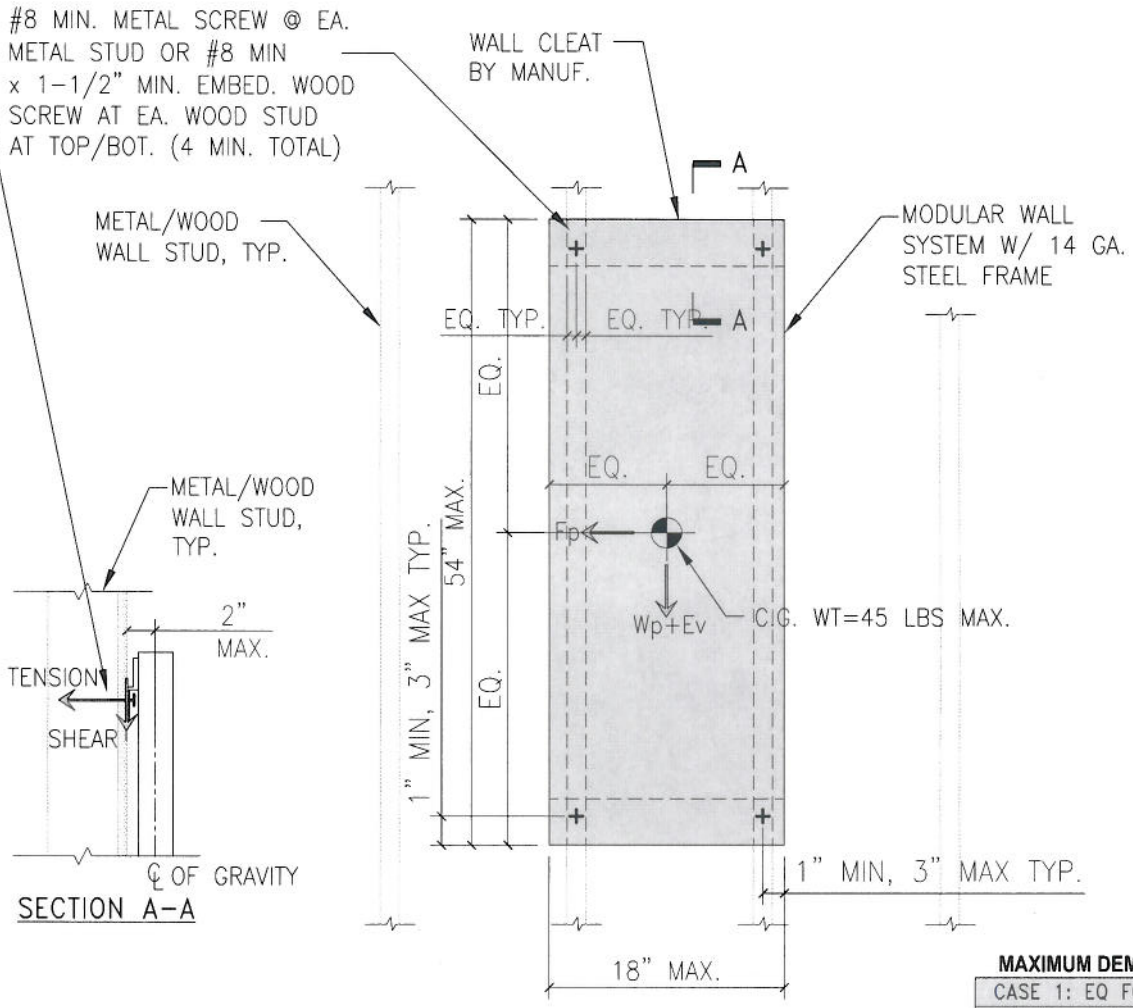

MAXIMUM DEMANDS AT WALL SCREWS

CASE 1: EQ FORCE PERPEND. TO WALL	
TENSION = 18.0 LBS	SHEAR = 17.9 LBS
CASE 2: EQ FORCE PARALLEL TO WALL	
TENSION = 7.6 LBS	SHEAR = 23.8 LBS
CASE 3: 100% PERPEND. 30% PARALLEL	
TENSION = 19.6 LBS	SHEAR = 18.5 LBS
CASE 4: 30% PERPEND. 100% PARALLEL	
TENSION = 12.3 LBS	SHEAR = 23.8 LBS

APPROVED
Fixed Equipment Anchorage
Office of Statewide Health Planning and Development
OPA-2626-10
Pre-approval Program Manager
Anthony R. Pike
(916) 440-8470
Roger 12/13/11
Reviewed By: ROGER Date

REGISTERED PROFESSIONAL ENGINEER
ANUJ BANSAL
No. 4583
Exp. 12-31-11
STRUCTURAL
STATE OF CALIFORNIA

Degenkolb
Degenkolb Engineers
300 S. Grand Ave. #1115, Los Angeles, CA 90071
Phone: (213) 596-5000 - Fax: (213) 596-5960

PETER PEPPER PRODUCTS	Designed By	TY
EVOLUTION MODULAR WALL SYSTEM EF SERIES	Project #	B0621026.00
	Date	11/08/2011

METAL/WOOD STUDWALL ATTACHMENT (MODELS EF3618, EF5418) - (ALTERNATE ATTACHMENT)

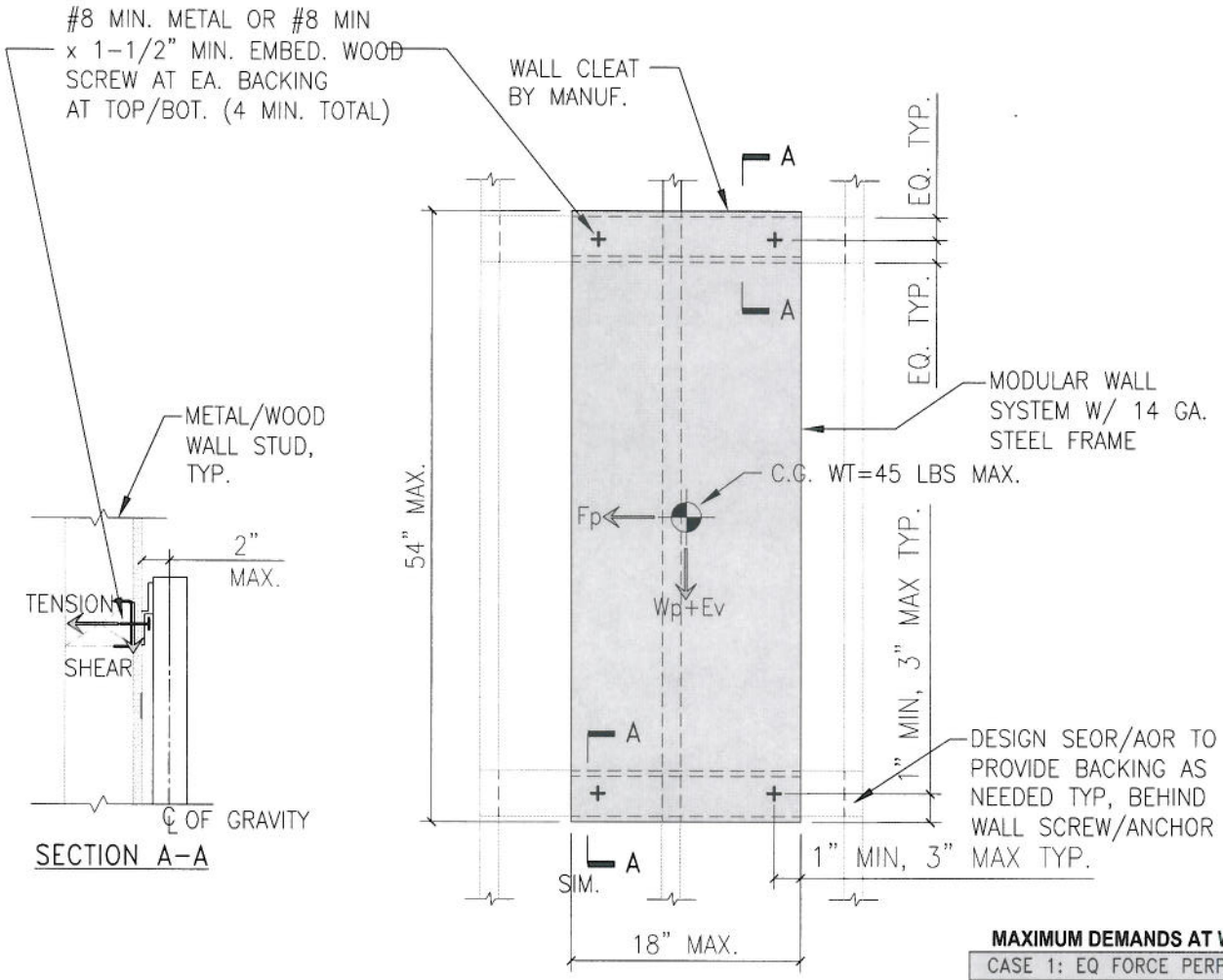

MAXIMUM DEMANDS AT WALL SCREWS

CASE 1: EQ FORCE PERPEND. TO WALL	
TENSION = 18.0 LBS	SHEAR = 17.9 LBS
CASE 2: EQ FORCE PARALLEL TO WALL	
TENSION = 7.6 LBS	SHEAR = 23.8 LBS
CASE 3: 100% PERPEND. 30% PARALLEL	
TENSION = 19.6 LBS	SHEAR = 18.5 LBS
CASE 4: 30% PERPEND. 100% PARALLEL	
TENSION = 12.3 LBS	SHEAR = 23.8 LBS

NOTES:
1. SEE PAGE 5 FOR INFO NOT SHOWN

APPROVED
Fixed Equipment Anchorage
Office of Statewide Health Planning and Development
OPA-2626-10
Pre-approval Program Manager
Anthony R. Pike
(916) 440-8470
Reviewed By: ROGER L. 12/13/11 Date

REGISTERED PROFESSIONAL ENGINEER
ANUJ BANSAL
No. 4583
Exp. 12-31-11
STRUCTURAL
STATE OF CALIFORNIA

Degenkolb
Degenkolb Engineers
300 S. Grand Ave. #1115, Los Angeles, CA 90071
Phone: (213) 596-5000 - Fax: (213) 596-5960

PETER PEPPER PRODUCTS	Designed By	TY
EVOLUTION MODULAR WALL SYSTEM EF SERIES	Project #	B0621026.00
	Date	11/08/2011

CONCRETE/CMU WALL ATTACHMENT (MODELS EF3618, EF5418)

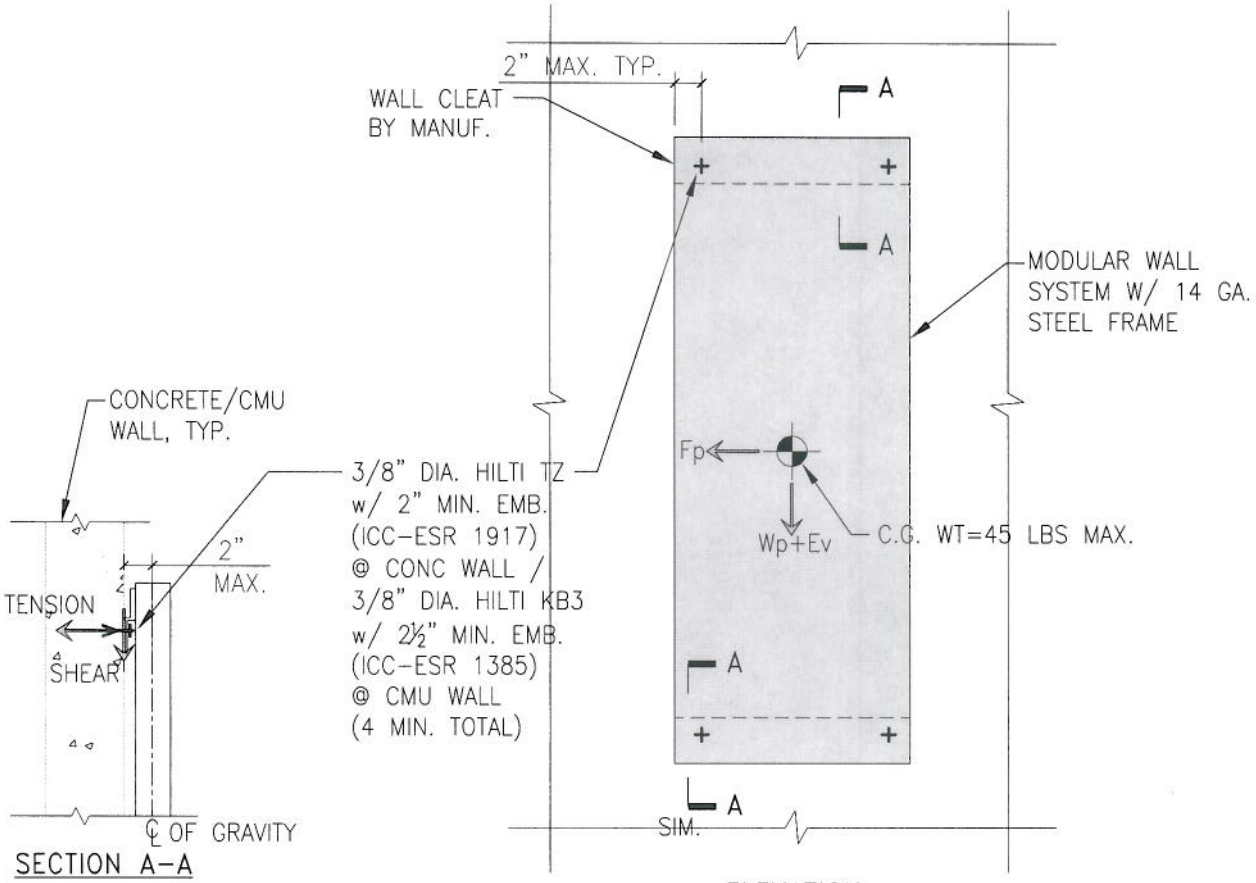

MAXIMUM DEMANDS AT WALL ANCHORS

CASE 1: EQ FORCE PERPEND. TO WALL	
TENSION = 18.0 LBS	SHEAR = 17.9 LBS
CASE 2: EQ FORCE PARALLEL TO WALL	
TENSION = 7.6 LBS	SHEAR = 23.8 LBS
CASE 3: 100% PERPEND. 30% PARALLEL	
TENSION = 19.6 LBS	SHEAR = 18.5 LBS
CASE 4: 30% PERPEND. 100% PARALLEL	
TENSION = 12.3 LBS	SHEAR = 23.8 LBS

NOTES:
1. SEE PAGE 5 FOR INFO NOT SHOWN

APPROVED
Fixed Equipment Anchorage
Office of Statewide Health Planning and Development
OPA-2626-10
Pre-approval Program Manager
Anthony R. Pike
(916) 440-8470
Reviewed By: ROGER LI 12/13/11
Date

REGISTERED PROFESSIONAL ENGINEER
ANUJ BANSAL
No. 4583
Exp. 12-31-11
STRUCTURAL
STATE OF CALIFORNIA

Degenkolb
Degenkolb Engineers
300 S. Grand Ave. #1115, Los Angeles, CA 90071
Phone: (213) 596-5000 - Fax: (213) 596-5960

PETER PEPPER PRODUCTS	Designed By	TY
EVOLUTION MODULAR WALL SYSTEM EF SERIES	Project #	B0621026.00
	Date	11/08/2011

METAL/WOOD STUDWALL ATTACHMENT (MODELS EF1836, EF1854)

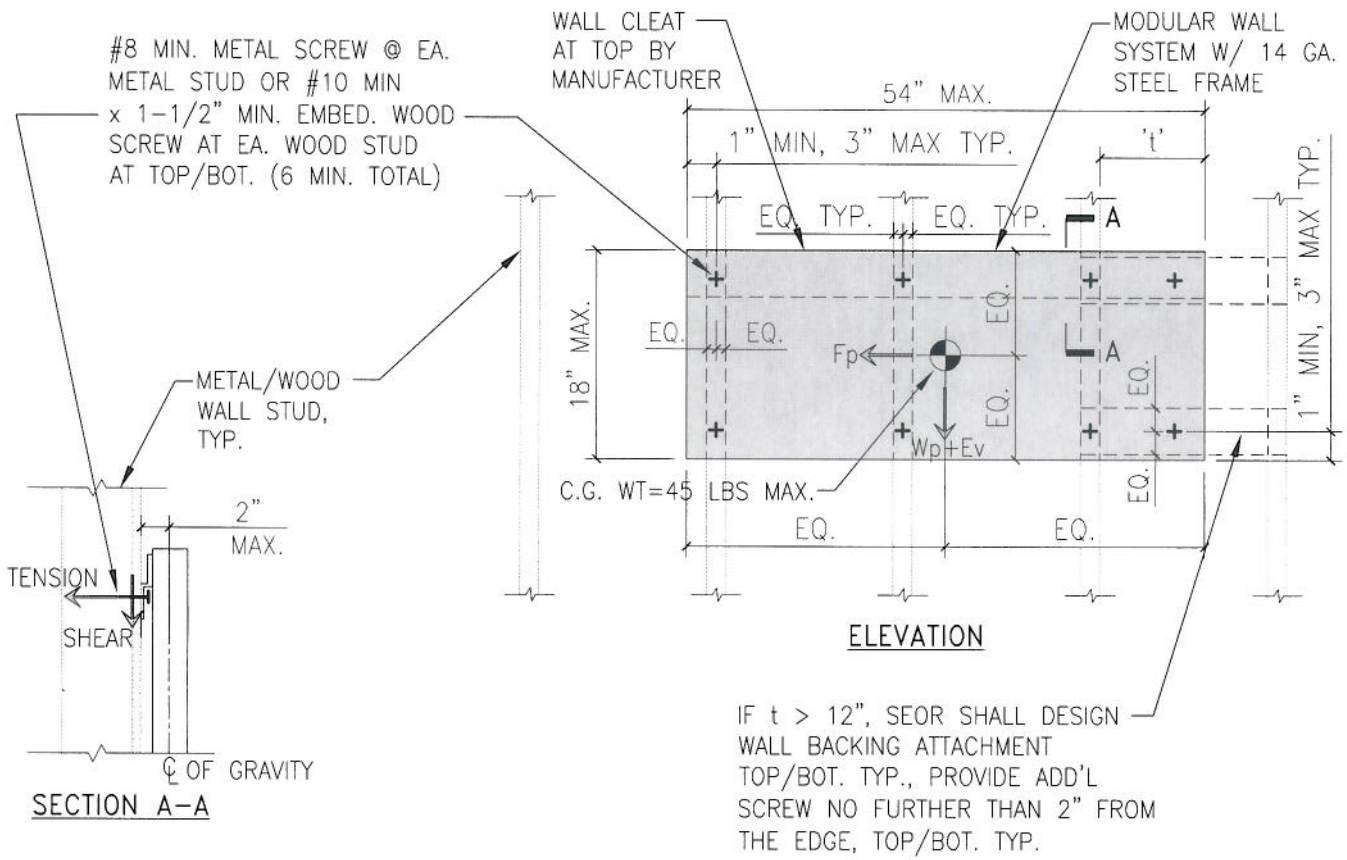

MAXIMUM DEMANDS AT WALL SCREWS

CASE 1: EQ FORCE PERPEND. TO WALL	
TENSION = 14.4 LBS	SHEAR = 11.9 LBS
CASE 2: EQ FORCE PARALLEL TO WALL	
TENSION = 6.0 LBS	SHEAR = 15.8 LBS
CASE 3: 100% PERPEND. 30% PARALLEL	
TENSION = 15.0 LBS	SHEAR = 12.3 LBS
CASE 4: 30% PERPEND. 100% PARALLEL	
TENSION = 9.2 LBS	SHEAR = 15.8 LBS

APPROVED
Fixed Equipment Anchorage
Office of Statewide Health Planning and Development
OPA-2626-10
Pre-approval Program Manager
Anthony R. Pike
(916) 440-8470
Roger Li 12/13/11
Reviewed By: ROGER LI Date

REGISTERED PROFESSIONAL ENGINEER
ANUJ BANSAL
No. 4583
Exp. 12-31-11
STRUCTURAL
STATE OF CALIFORNIA

Degenkolb
Degenkolb Engineers
300 S. Grand Ave. #1115, Los Angeles, CA 90071
Phone: (213) 596-5000 - Fax: (213) 596-5960

PETER PEPPER PRODUCTS	Designed By	TY
	Project #	B0621026.00
EVOLUTION MODULAR WALL SYSTEM EF SERIES	Date	11/08/2011

CONCRETE/CMU WALL ATTACHMENT (MODELS EF1836, EF1854)

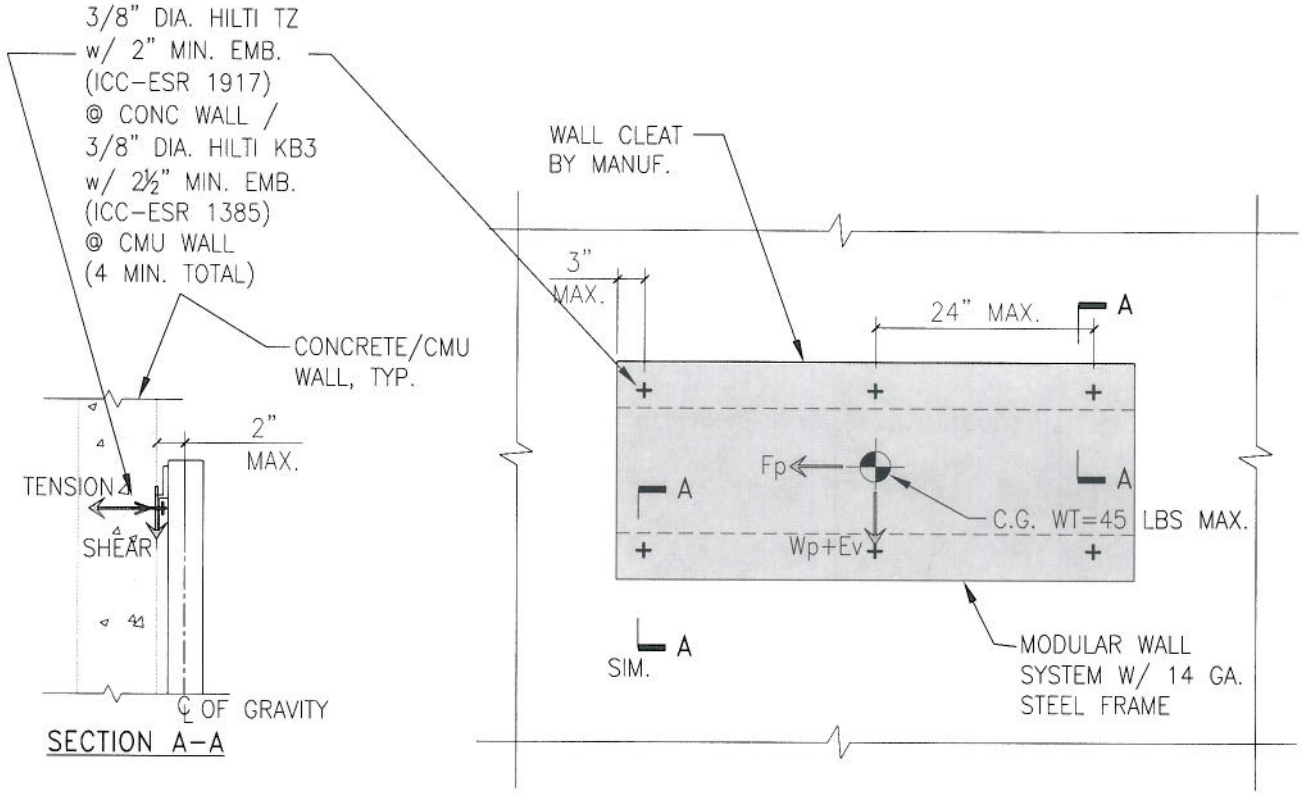

MAXIMUM DEMANDS AT WALL ANCHORS

CASE 1: EQ FORCE PERPEND. TO WALL	
TENSION = 14.4 LBS	SHEAR = 11.9 LBS
CASE 2: EQ FORCE PARALLEL TO WALL	
TENSION = 6.0 LBS	SHEAR = 15.8 LBS
CASE 3: 100% PERPEND. 30% PARALLEL	
TENSION = 15.0 LBS	SHEAR = 12.3 LBS
CASE 4: 30% PERPEND. 100% PARALLEL	
TENSION = 9.2 LBS	SHEAR = 15.8 LBS

NOTES:
1. SEE PAGE 8 FOR INFO NOT SHOWN

APPROVED
Fixed Equipment Anchorage
Office of Statewide Health Planning and Development
OPA-2626-10
Pre-approval Program Manager
Anthony R Pike
(916) 440-8470
Reviewed By ROGER U 12/13/11 Date

REGISTERED PROFESSIONAL ENGINEER
ANUJ BANSAL
No. 4583
Exp. 12-31-11
STRUCTURAL
STATE OF CALIFORNIA

Degenkolb	Degenkolb Engineers 300 S. Grand Ave. #1115, Los Angeles, CA 90071 Phone: (213) 596-5000 - Fax: (213) 596-5960		Sheet
PETER PEPPER PRODUCTS	Designed By	TY	10 of 13
EVOLUTION MODULAR WALL SYSTEM EF SERIES	Project #	B0621026.00	
	Date	11/08/2011	

METAL/WOOD STUDWALL ATTACHMENT (MODELS EF3636, EF5436)

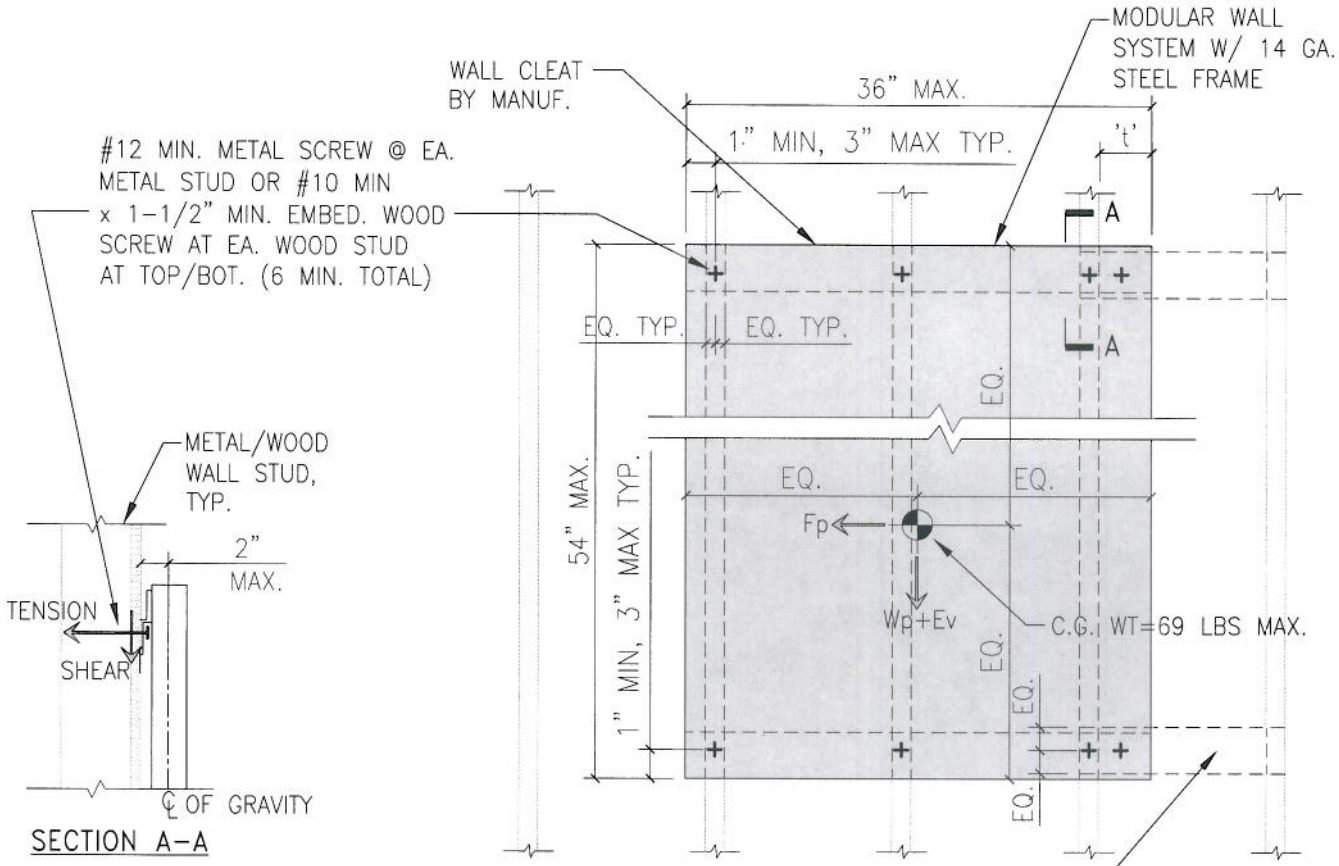

IF t > 12", SEOR SHALL DESIGN WALL BACKING ATTACHMENT TOP/BOT. TYP., PROVIDE ADD'L SCREW NO FURTHER THAN 2" FROM THE EDGE, TOP/BOT. TYP.

MAXIMUM DEMANDS AT WALL SCREWS

CASE 1: EQ FORCE PERPEND. TO WALL	
TENSION = 27.6 LBS	SHEAR = 27.4 LBS
CASE 2: EQ FORCE PARALLEL TO WALL	
TENSION = 6.9 LBS	SHEAR = 36.4 LBS
CASE 3: 100% PERPEND. 30% PARALLEL	
TENSION = 28.6 LBS	SHEAR = 28.4 LBS
CASE 4: 30% PERPEND. 100% PARALLEL	
TENSION = 14.0 LBS	SHEAR = 36.4 LBS

APPROVED
Fixed Equipment Anchorage
Office of Statewide Health Planning and Development

OPA-2626-10
Pre-approval Program Manager
Anthony R. Pike
(916) 440-8470

Roger Li 12/13/11
Reviewed By: ROGER LI Date

REGISTERED PROFESSIONAL ENGINEER
ANUJ BANSAL
No. 4583
Exp. 12-31-11
STRUCTURAL
STATE OF CALIFORNIA

Degenkolb
Degenkolb Engineers
300 S. Grand Ave. #1115, Los Angeles, CA 90071
Phone: (213) 596-5000 - Fax: (213) 596-5960

PETER PEPPER PRODUCTS	Designed By	TY
	Project #	B0621026.00
EVOLUTION MODULAR WALL SYSTEM EF SERIES	Date	11/08/2011

CONCRETE/CMU WALL ATTACHMENT (MODELS EF3636, EF5436)

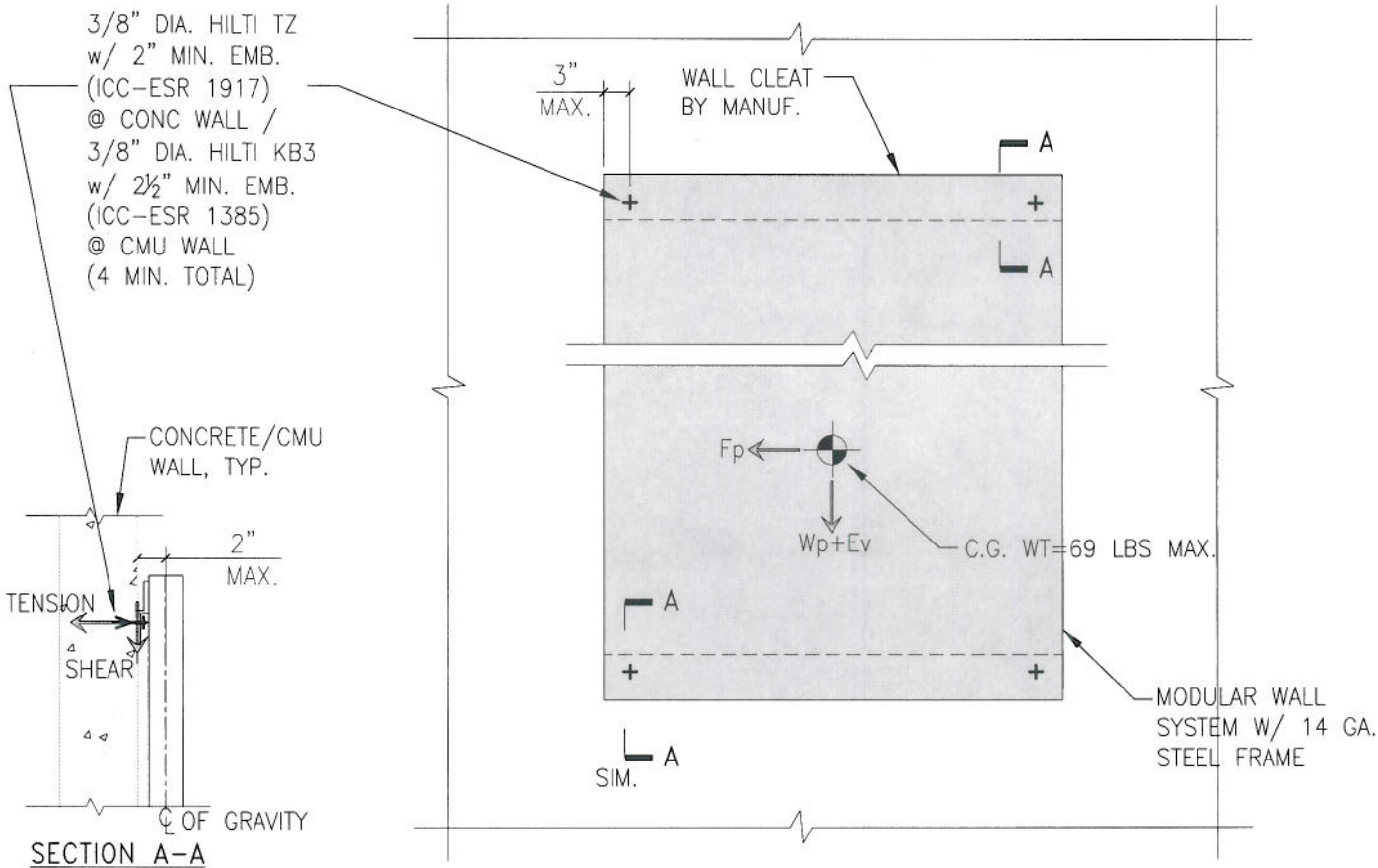

MAXIMUM DEMANDS AT WALL ANCHORS

CASE 1: EQ FORCE PERPEND. TO WALL	
TENSION = 27.6 LBS	SHEAR = 27.4 LBS
CASE 2: EQ FORCE PARALLEL TO WALL	
TENSION = 6.9 LBS	SHEAR = 36.4 LBS
CASE 3: 100% PERPEND. 30% PARALLEL	
TENSION = 28.6 LBS	SHEAR = 28.4 LBS
CASE 4: 30% PERPEND. 100% PARALLEL	
TENSION = 14.0 LBS	SHEAR = 36.4 LBS

NOTES:
1. SEE PAGE 10 FOR INFO NOT SHOWN

APPROVED
Fixed Equipment Anchorage
Office of Statewide Health Planning and Development
OPA-2626-10
Pre-approval Program Manager
Anthony R. Pike
(916) 440-8470
Reviewed By: ROGER LI
12/13/11
Date

REGISTERED PROFESSIONAL ENGINEER
ANUJ BANSAL
No. 4583
Exp. 12-31-11
STRUCTURAL
STATE OF CALIFORNIA

Degenkolb
Degenkolb Engineers
300 S. Grand Ave. #1115, Los Angeles, CA 90071
Phone: (213) 596-5000 - Fax: (213) 596-5960

PETER PEPPER PRODUCTS	Designed By	TY
	Project #	B0621026.00
EVOLUTION MODULAR WALL SYSTEM EF SERIES	Date	11/08/2011

METAL/WOOD STUDWALL ATTACHMENT (MODELS EF3654, EF3672, EF3690)

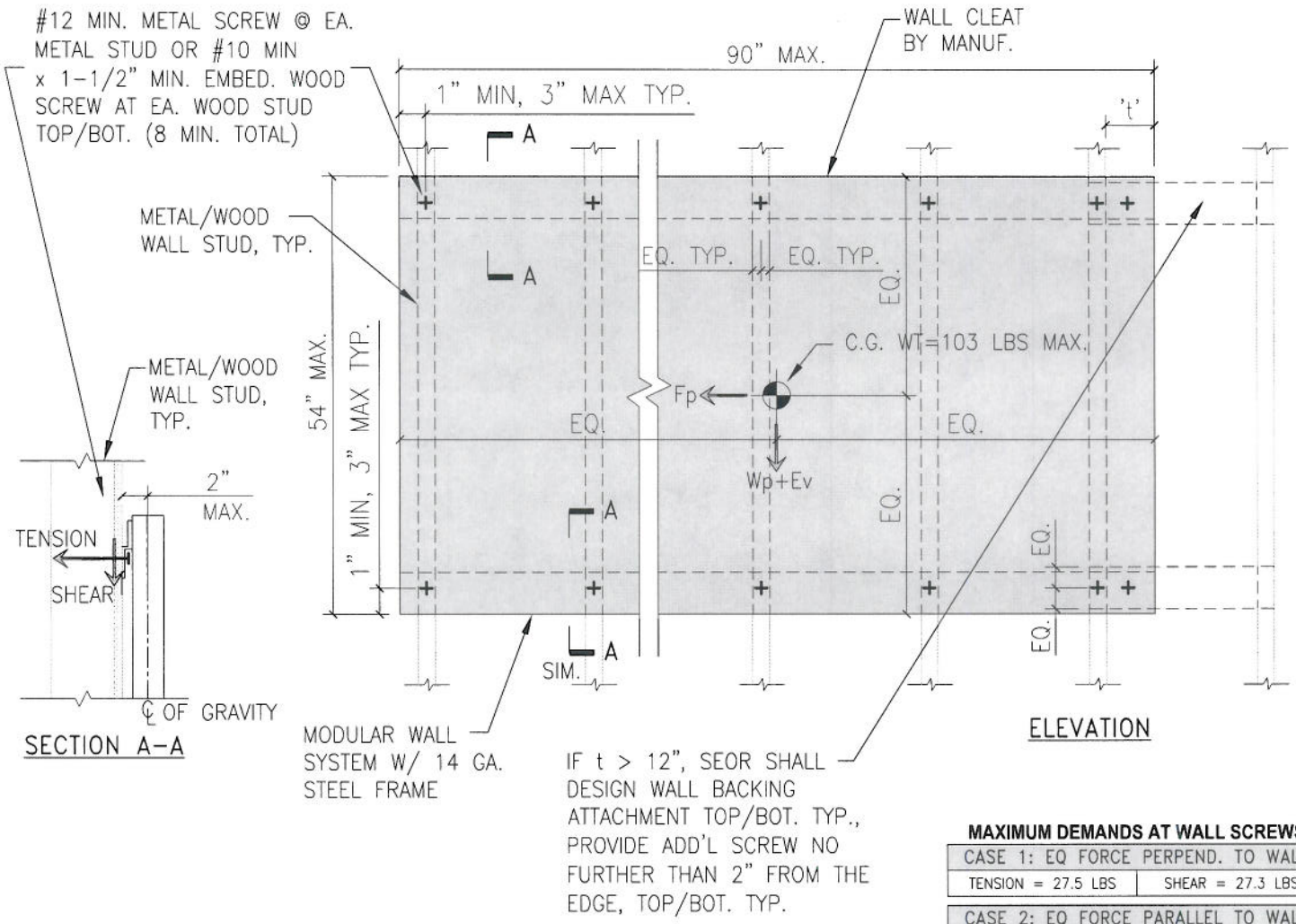

MAXIMUM DEMANDS AT WALL SCREWS

CASE 1: EQ FORCE PERPEND. TO WALL	
TENSION = 27.5 LBS	SHEAR = 27.3 LBS
CASE 2: EQ FORCE PARALLEL TO WALL	
TENSION = 6.6 LBS	SHEAR = 36.3 LBS
CASE 3: 100% PERPEND. 30% PARALLEL	
TENSION = 28.4 LBS	SHEAR = 28.2 LBS
CASE 4: 30% PERPEND. 100% PARALLEL	
TENSION = 13.8 LBS	SHEAR = 36.3 LBS

APPROVED
Fixed Equipment Anchorage
Office of Statewide Health Planning and Development
OPA-2626-10
Pre-approval Program Manager
Anthony R. Pike
(916) 440-8470
Reviewed By: ROGER LI 12/13/11
Date

REGISTERED PROFESSIONAL ENGINEER
ANUJ BANSAL
No. 4583
Exp. 12-31-11
STRUCTURAL
STATE OF CALIFORNIA

Degenkolb	Degenkolb Engineers 300 S. Grand Ave. #1115, Los Angeles, CA 90071 Phone: (213) 596-5000 - Fax: (213) 596-5960		Sheet
PETER PEPPER PRODUCTS	Designed By	TY	13 of 13
EVOLUTION MODULAR WALL SYSTEM EF SERIES	Project #	B0621026.00	
	Date	11/08/2011	

CONCRETE/CMU WALL ATTACHMENT (MODELS EF3654, EF3672, EF3690)

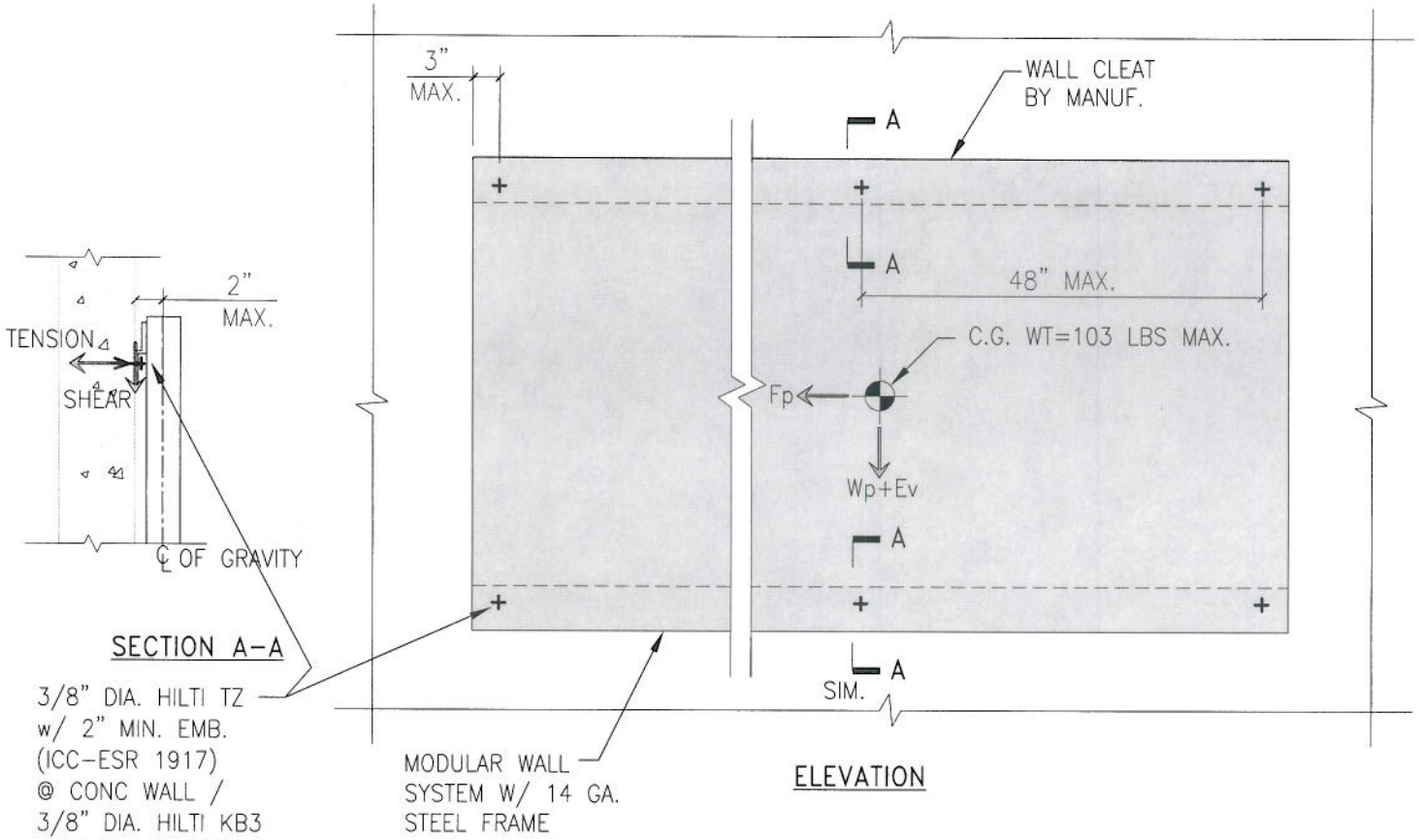

MAXIMUM DEMANDS AT WALL ANCHORS

CASE 1: EQ FORCE PERPEND. TO WALL	
TENSION = 27.5 LBS	SHEAR = 27.3 LBS
CASE 2: EQ FORCE PARALLEL TO WALL	
TENSION = 6.6 LBS	SHEAR = 36.3 LBS
CASE 3: 100% PERPEND. 30% PARALLEL	
TENSION = 28.4 LBS	SHEAR = 28.2 LBS
CASE 4: 30% PERPEND. 100% PARALLEL	
TENSION = 13.8 LBS	SHEAR = 36.3 LBS

NOTES:

1. SEE PAGE 12 FOR INFO NOT SHOWN

APPROVED

Fixed Equipment Anchorage

Office of Statewide Health Planning and Development

OPA-2626-10

Pre-approval Program Manager
Anthony R. Pike
(916) 440-8470

Reviewed By: ROGER 12/13/11 Date

REGISTERED PROFESSIONAL ENGINEER
ANUJ BANSAL
No. 4583
Exp. 12-31-11
STRUCTURAL
STATE OF CALIFORNIA